Reach Compact Closed Coupled WC

WC unit with P-trap pan; push button dual flush 3/6 litres; easy to install with all cistern fixings and floor fixings included; compact design comfort height bowl with ergonomic seat.

Product	18558W-00 18553W-00	Reach Compact Close Coupled WC Cistern for Reach Compact Close Coupled WC
Colours/finishes	White (-00)	
Material	Vitreous China	
Weight (kg)	26	
Fixings	Fixings included	
Complimentary items	E6019-00 Standard toilet seat E6046-00 Compact soft-close toilet seat	
Design linked items	Reach sanitaryware and furniture	

To order, please use the product code and add the colour/finish reference, eg. -00 for white.

Dimensions

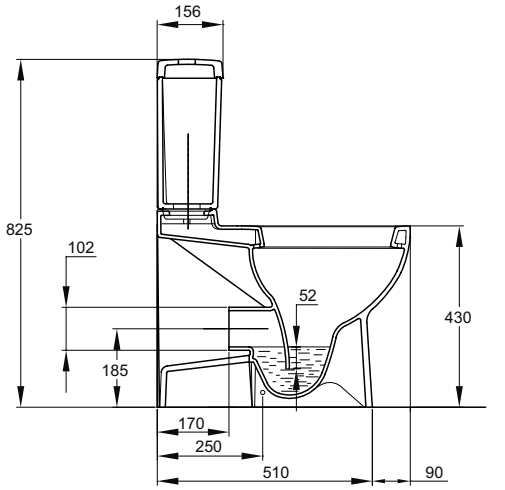

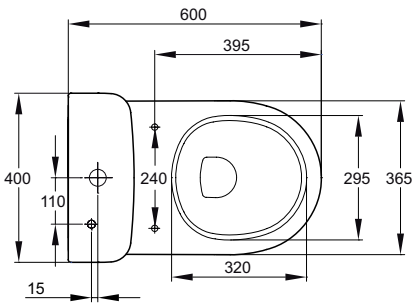

All measurements shown are in millimetres.
Sizes are approximate.

THE BOLD LOOK OF KOHLER®

Kohler Co. Cromwell Road Cheltenham Gloucestershire GL52 5EP United Kingdom
Telephone +44 (0) 870 850 5551
Facsimile +44 (0) 844 472 3063
www.kohler.co.uk